GDEL 深圳市亿利百斯特电子有限公司
广东亿利精密电子有限公司

# 承　認　書

APPROVE　　SHEET

RoHS

敬請承認如下之形式規格書：

客 戶 名 稱
CUSTOMER: _____

貴公司製品名　　本公司製品名：
CUSTOMER PN: _____　PRODUCT PN: 带灯轻触开关

貴公司規格　　本公司規格:
APPROVAL DAT: _____　PRODUCT CODE: EL-6607462系列

客戶料號：　　本公司規格書編號：
CUSTOMER NO.: _____　PRODUCT DRAWING NO.: _____

| | APPROVAL 批　准 | CHECK 審　查 | DESIGN 設　計 |
|---|---|---|---|
| ■ 新品承認 NEW APPROVE<br>☐ 規格變更再承認 CHANGE CODE APPROVE AGAIN<br>☐ 材料變更再承認 CHANGE MATERIAL APPROVE AGAIN | 朱艳军<br>DATE: | 彭佳伟<br>DATE: | 卢旋<br>DATE: |

貴公司承認欄

APPROVAL　SIGNATURES

請於____年____月____日前承認返回　　日期 DATE:_____

PLEASE RETURN TO ADMIT XUNIANRURI

深圳市亿利百斯特电子有限公司
ShenZhen ElyBest Electronics Co ., Ltd
付文鹏（Vincent Fu）
Tel：0755-28213003
Fax: 0755-85215085
Mob:18923844556
Email：vincent@elybest.com
Add：深圳市龙岗区平湖街道世之鼎产业园B栋2楼

亿利百斯特电子 亿利精密

ABIDE BY WEEE & ROHS

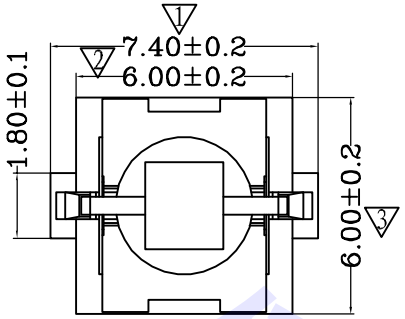


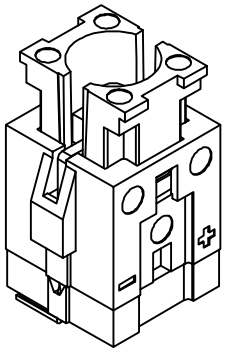

技术参数

1. 额定电流: DC 12V 50mA
2. 耐高压: 交流250伏 (50-60赫兹) 持续 1 分钟
3. 接触阻抗: 30毫欧max
4. 绝缘阻抗: 100兆欧min . 250VDC.
5. 操作力: 160± 30gf
6. 导通行程: 0.25mm± 0.1mm
8. 寿命: 100.000次.
9. 操作类型: 触动回复式

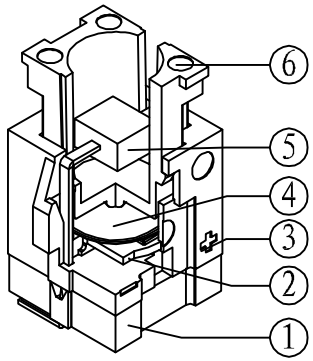


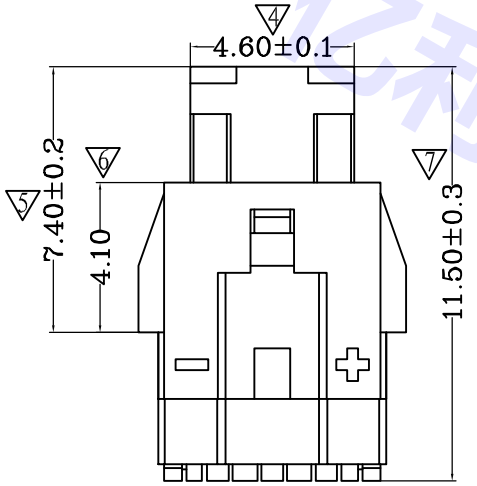


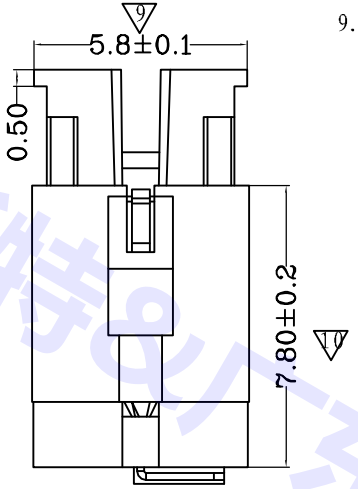


Absolute Maximum Rating(极限参数) (TA=25℃)

| Parameter(参数) | SYMBOL | COLOR | RATING | Unit |
|---|---|---|---|---|
| POWER DISSIPATION(允许功率) | Pd | White | 111 | mW |
| | | Yellow | 75 | |
| FORWARD CURREN(正向电流) | IF | White | 30 | mA |
| | | Yellow | 30 | |
| PEAK FORWARD CURRENT(正向峰值电流) | IFP | White | 125 | mA |
| | | Yellow | 125 | |
| Operating Temperature Range(工作温度) | TOPR | | -40℃ to +80℃ | ℃ |
| Storage Temperature Range(存储温度) | TSTG | | -40℃ to +85℃ | ℃ |
| Storage Temperature Range(焊接温度) | TSOL | | 260℃ for 5 Seconds | ℃ |

CONDMON FOR IFP IS PULSE OF 1/8 DUTY AND F=1K Hz

ELECTRICAL AND OPTICAL CHARACTERISTICS(电气光学特性) (TA=25℃)

| Parameter(参数) | SYMBOL | Condition | COLOR | Min. | Typ. | Max. | Unit |
|---|---|---|---|---|---|---|---|
| Forward Voltage(正向工作电压) | VF | IF=20mA | White | 2.80 | 3.10 | 3.70 | V |
| | | | Yellow | 1.70 | 2.00 | 2.50 | |
| Luminous Intensity(发光强度) | IV | IF=20mA | White | 125 | 250 | 400 | mcd |
| | | | Yellow | 50 | 90 | 160 | |
| Dominant Wavelength(主波长) | λd | IF=20mA | Yellow | 585 | 588 | 590 | nm |
| AEAK WAVE LENGTH(峰值波长) | λP | IF=20mA | Yellow | --- | 590 | --- | nm |
| CIE CHROMATICITY(色坐标) | X | IF=20mA | White | --- | 0.302 | --- | -- |
| | Y | | | --- | 0.282 | --- | |
| Spectral Line Half Width (光谱线半宽) | Δλ | IF=20mA | Yellow | - | 17 | - | nm |
| Viewing angle(视角) | 2θ1/2 | IF=10mA | White Yellow | - | 150 | - | deg |

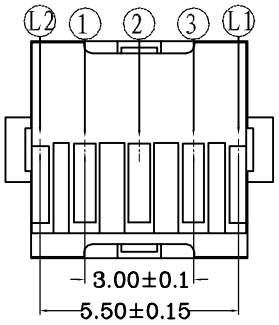


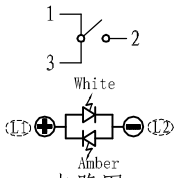


电路图

| 序号 | 产品型号 | 端子编号 | 数量 | 材料 | 备注 |
|---|---|---|---|---|---|
| ⑥ | LED灯 | | 1 | 小朗蝶平头(黄色胶体) | 发白色/琥珀色光 |
| ⑤ | 导芯 | | 1 | 尼龙(PA9T UL94V0) | 黑 色 |
| ④ | 弹片 | | 1 | 磷铜(C5210-EH) | 磷铜复银 |
| ③ | 基座 | | 1 | 尼龙(PA9T UL94V0) | 黑色 |
| ② | 端子 | | 3 | 黄铜(C2680) | 镀银(Ag) |
| ① | 底套 | | 1 | LCP | 黑色 |

GDEL 深圳市亿利百斯特电子有限公司

| 工程变更通知单号 | 版次 | 日期 | 说明 | 修改 | 审核 | 核准 | 未详细说明之公差 | | 比 例 | 1:1 | 单位 | mm | 页码 | A4 |
|---|---|---|---|---|---|---|---|---|---|---|---|---|---|---|
| | | | | | | | 角度 | ±2° | 成品图面 | 设计 | 刘志勇 | 日期 | 2016.12.05 | 名称: 7462发(白-琥珀)双色光开关黑导黑座(160克力) |
| | | | | | | | 30 – 20 | ±0.30 | | 审核 | | 日期 | | |
| | | | | | | | 20 – 10 | ±0.25 | | 核准 | | 日期 | | 料号: EL-6607462 |
| | A0 | | NEW | | | | L<=10 | ±0.20 | 图面编号: C01T3074A01011610-33MD | | | | | |

亿利百斯特9小东亿利精密

## 1. 一般特性 General Characteristics

1.1 额定值(Rating Value): DC12V 50mA

1.2 工作温度(Work Temperature Range): -20℃ ~ 70℃

1.3 存贮温度(Store Temperature Range): -30℃ ~ 80℃

1.4 正常测试条件(未有特殊说明量测在以下条件进行):

General test condition (Tests and measurements shall be made under the following standard conditions unless otherwise specified):

正常温度: 5℃~35℃ 相对湿度: 45%~85% RH 气 压: 8,600~10,600 帕

Temperature: 5℃~35℃ Relative humidity: 45%~85% Air pressure: 8,600~10,600 pa

## 2. 产品外观及尺寸要求 Appearance & Dimension Requirement

2.1 产品外形结构紧凑,无配合不良.

The structure of product is compact, and assembly of parts has no badness.

2.2 产品塑胶部件无缩水. 披锋. 欠注. 斑点. 破损或变形现象.

The plastic parts of product have no defects such as very serious shrink, scarcity, fleck, disrepair, transmutation, etc.

2.3 产品引脚无氧化. 脏污. 变形. 毛刺或电镀不良.

Lead feet have no defects such as oxidation, smudge, disrepair, burr, defects on plating.

2.4 开关操作顺畅,节奏感强,无明显卡塞现象.

Operating switch is unhindered, rhythmed .

2.5 产品结构及尺寸参见产品规格图纸。

Construction and dimensions: Refer to individual product drawing.

## 3. 电气特性 Electronic Characteristics

| No. | 项 目<br>Item | 测试方法<br>Test Method | 测试设备<br>Equipment | 特性要求<br>Requirements |
|---|---|---|---|---|
| 3.1 | 接触阻抗<br>Contact Resistance | 在低电流（≤100mA）条件下测试.<br>Measured at low current (100mA or less). | 低电阻测试仪<br>Low Resistance Meter | 100mΩ max |
| 3.2 | 绝缘阻抗<br>Insulation Resistance | 测试相邻引脚之间,引脚与外壳之间的绝缘阻抗(DC 250V).<br>Measurement shall be made between adjacent terminals, between terminal and shell(DC 250V). | 绝缘测试机<br>Insulation Resistance Tester | 100MΩ min |
| 3.3 | 耐压测试<br>Dielectric Withstand Voltage | 输入一定电压(50-60Hz,电压值 AC 250V)1 分钟,漏电流为 2mA,测试邻近端子间.<br>Apply certain voltage (50-60Hz, AC 250V) for 1 minute between adjacent contacts of the connector with 2mA leakage sensitivity. | 耐压测试机<br>Puncture Tester | 没有绝缘破坏. 电弧等异常.<br>No arcing , break-down and damaging insulation. |

亿利百斯特GDEL广东亿利精密

## 4. 机械特性 Mechanical Characteristics

| No. | 项 目<br>Item | 测试方法<br>Test Method | 测试设备<br>Equipment | 特性要求<br>Requirements |
|---|---|---|---|---|
| 4.1 | 操 作 力<br>Operation Force | 逐渐施力操作开关按键，测量开关到达全部工作行程时所需的最大操作力度。 Operate the keystoke of the switch vertically, and then increase press strength gradually, Measured maximum operation force while the travel of the switch is full. | 推拉力计<br>Push-Pull Force Gauge | 见图面<br>See Drawing |
| 4.2 | 行 程<br>Full travel | 垂直操作开关按键，量测开关顶端最大移动距离.Operate the keystoke of the switch vertically, the travel distance of keystoke moving from its free position to maximum moving distance shall be measurement. | 游标卡尺<br>Vernier Caliper | 0.25±0.10 |
| 4.3 | 静止强度<br>Static Strength | 开关的动作方向为垂直放置开关,在推柄动作方向施加 3KG 的静负荷,60 秒时间. Placing the switch such that the direction of switch operation is vertical, a static load of 3 kgf shall be applied in the direction of stem operation for a period of 60 seconds. | 推拉力计<br>Push-Pull Force Gauge | 无机械的和电气的损伤迹象<br>There shall be no sign of damage mechanically and electrically. |

## 5. 可靠性测试 Reliability trial

| No. | 项 目<br>Item | 测试方法<br>Test Method | 测试设备<br>Equipment | 特性要求<br>Requirements |
|---|---|---|---|---|
| 5.1 | 盐雾实验<br>Salt Mist Test | 试件在下述实验后测量：<br>1．温度： 35±5°C<br>2．盐溶液浓度:5±1%(质量百分比)，<br>3．试验时间：24 小时，<br>4．试验后，将盐沉积物用水冲掉。<br>The switch shall be checked after following test:<br>1. Temperature: 35±5°C<br>2. Salt solution: 5±1%(Solids by mass)<br>3. Duration: 24 hours,<br>4. After immersing, salt deposit shall be removed by running water. | 盐雾试验机<br>Salt Spray Tester | 在金属件上没有严重腐蚀斑点。<br>No remarkable corrosion shall be recognized in metal parts. |

亿利百斯特&广东亿利精密

## 5. 可靠性测试 Reliability trial

| No. | 项 目<br>Item | 测试方法<br>Test Method | 测试设备<br>Equipment | 特性要求<br>Requirements |
|---|---|---|---|---|
| 5.2 | 机械寿命<br>Operation Life Without Load | 开关在 50mA,12V DC 条件下，于寿命试验设备上以60次/分的速度连续被操作 100,000 次。<br>Switch shall be operated 100,000cycles at 60 cycles /min with 12V DC 50mA(Resistive Load). | 寿命试验机<br>Life Tester | 寿命: 100.000次<br>实验后:<br>接触电阻200mΩMax.<br>绝缘电阻:50MΩ Min<br>操作力:变化在±50%内<br>开关外观及结构无损坏。<br>Life test:100.000cycles<br>After test:<br>Contact resistance: 200mΩMax<br>Insulation resistance: 50MΩ Min<br>Operating force: Change should be within ±50% of specified value.<br>No abnormalities shall be recognized in appearance and construction. |
| 5.3 | 耐焊接热<br>Resistance to Soldering heat | 试件在下述条件下进行试验:<br>1.P.C.B.厚度为 1.6mm,<br>2.开关在 150℃条件下预热 2 分钟后再于230℃ max的锡炉中焊接,<br>Switch shall be measured after following test:<br>1. 1.6mm thick glass epoxy P.C.B<br>2. Switches shall be heat up at 150℃ for 2 minutes, then be soldered at 230℃ max.<br>Temperature profile(Reference)<br> 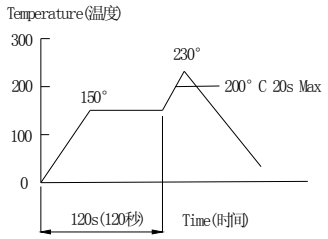 | 控温锡炉<br>控温烙铁<br>Solder Stove<br>Solder Searing-iron | 本体无变形，能满足于机械、电气性能.<br>Appearance should be not damaged,electrical and mechanical characteristics shall be satisfied.<br>(接触电阻:200mΩMax.<br>绝缘电阻:50 MΩ Min<br>Contact resistance: 200mΩ Max<br>Insulation resistance:50MΩMin |

亿利百斯特&广东亿利精密

## 5. 可靠性测试 Reliability trial

| No. | 项 目<br>Item | 测试方法<br>Test Method | 测试设备<br>Equipment | 特性要求<br>Requirements |
|---|---|---|---|---|
| 5.4 | 可焊性试验<br>Solder ability Test | 端子顶部被浸入焊锡炉中,温度为240±5℃，时间3±1秒.<br>The top of the terminals shall be dipped in the solder bath at 240±5℃ for 3±1 seconds. | 控温锡炉<br>Solder Stove | 引脚至少95%上锡.<br>Ninety-five percent of terminals shall be dipped. |
| 5.5 | 耐高温测试<br>Resistance to Heat Test | 放置在温度80±2℃环境中96小时后，再置于正常条件下1小时后测定。<br>The switch shall be stored at a temperature of 80±2℃ for 96 hours, Measurements shall be made after it be subjected to the standard conditions for 1 hour. | 高低温试验机<br>High & Low Temperature Tester | 外观，机械及电气性能均符合要求。<br>Appearance, electrical and mechanical characteristics shall be satisfied.<br>(接触电阻:200mΩMax.<br>绝缘电阻:50MΩ Min<br>Contact resistance: 200mΩ Max<br>Insulation resistance:50MΩMin |
| 5.6 | 耐低温测试<br>Resistance to Cold Test | 放置在温度-30±2℃环境中96小时后，再置于正常条件下1小时后测定。<br>The switch shall be stored at a temperature of -30±2℃ for 96 hours, Measurements shall be made after it be subjected to the standard conditions for 1 hour. | 高低温试验机<br>High & Low Temperature Tester | 外观，机械及电气性能均符合要求。<br>Appearance, electrical and mechanical characteristics shall be satisfied.<br>(接触电阻:200mΩMax.<br>绝缘电阻:50MΩ Min<br>Contact resistance: 200mΩ Max<br>Insulation resistance:50MΩMin |
| 5.7 | 耐湿性测试<br>Resistance to Humidity Test | 放置于温度 40±2℃，相对湿度为90~96%环境中96小时后，再置于正常条件下1小时后测定(注意要擦去水滴)。<br>The switch shall be stored at a temperature of 40±2℃,relative humidity 90~96% for 96 hours, Measurements shall be made after it be subjected to the standard conditions for 1 hour (Wipe out water drip). | 恒温恒湿箱<br>Temperature & Humidity Tester Chamber | 外观，机械及电气性能均符合要求。<br>Appearance, electrical and mechanical characteristics shall be satisfied.<br>(接触电阻:200mΩMax.<br>绝缘电阻:50MΩ Min<br>Contact resistance: 200mΩ Max<br>Insulation resistance:50MΩMin |

亿利百斯特电子有限公司