REV.	Q'TY	ECN. NO.	REASON&CONTENTS	SIGN	DATE
01	0		New release	PJ	2017.11.27

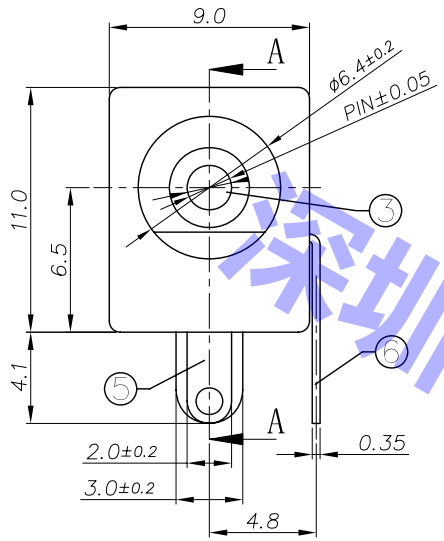

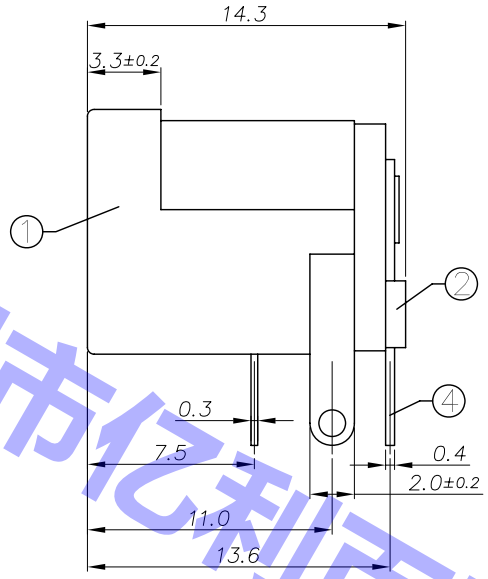

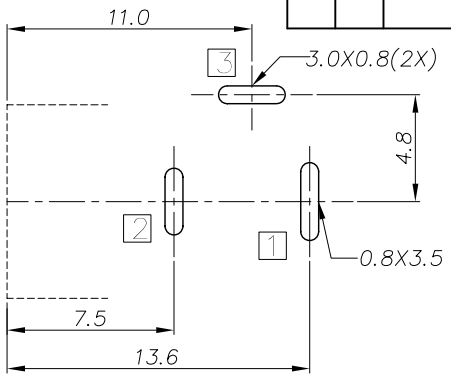

RECOMMENDED P.C.B. LAYOUT
UNSPECIFIED TOLERANCE:±0.05
(BOTTOM VIEW)

Ordering information:

DC0005Y-□ □ □□ □□ T □ □
(1) (2) (3) (4) (5) (6) (7) (8)

(1):Series No.
(2):Schematic option: A,B
(3):Center pin diameter:
H=□2.0 , J=□2.5
(4):Material of housing:
PB=PBT 9T=PA9T
(5):Housing color:
Zero 0A=Black
4A=Yellow(XH-1163)=PBT4815
4H=Yellow(0039=XH1029)=PBT4815
5I=Green(0274)=PBT4815
5P=Green(0116)=PBT4815
5Z=Green(XH-1200)=PBT4815
6B=Blue(XH-1161)=PBT4815
6C=Blue(XH-1164)=PBT4815
8A=Gray(0292)=PBT4815
8G=Gray(0228)=PBT4815
9A=White(0100=XH1013)=PBT4815
(6):Terminal plating:
T=Tin(Sn)
(7):Special option:
0=Black cover
1=Cover and the housing have the same color. but cover and housing are black use code "0".
H=Cover and housing are black Halogen Free
(8):Packing mode:
3=Plastic box packing
4=Bag packing

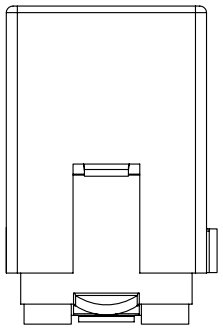

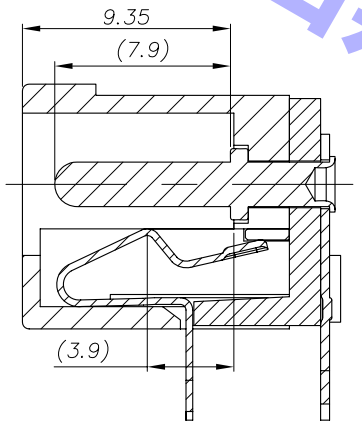

SECTION A-A

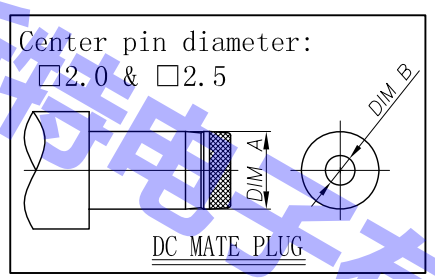

Model No.	DC0005Y-_H	DC0005Y-_J
PIN	ø2.0	ø2.5
DIM A	ø5.5±0.05	ø5.5±0.05
DIM B	ø2.05 $^{+0.10}_{-0.00}$	ø2.55 $^{+0.10}_{-0.00}$

NO.	DESCRIPTION	Q'TY	MATERIAL	REMARK
⑥	Shunt Terminal 3	1	Brass t=0.35	Tin plating
⑤	Tip spring 2	1	Phosphor bronze t=0.30	Tin plating
④	Center pin terminal 1	1	Brass t=0.40	Tin plating
③	Center pin	1	Brass	Ni plating
②	Cover	1	Thermoplastic	See P/N ordering info
①	Housing	1	Thermoplastic	See P/N ordering info

Specification:
1. Rating : DC 20V 4A;
2. Contact resistance: ≤30mΩ;
After test:≤50mΩ
3. Insulation resistance: ≥100MΩ (500VDC);
After test:≥50MΩ
4. Withstand voltage: 500VAC ;
5. Insertion and extraction force: 3N～30N;
6. life test: 5000cycles MIN.;
7. Operation temperature range:-20℃～70℃
8. Preservative temperature range:-40℃～85℃

Model No.	DC0005*-A	DC0005*-B
Schematic	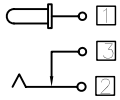	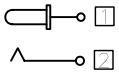
CIRCUIT DIAGRAM		

□ : TERMINAL NO.

THIS DOCUMENT IS THE SOLE PROPERTY OF Bsun ELECTRONICS CO., LTD. AND SHOULD NOT BE USED IN WHOLE OR INPART WITHOUT PRIOR WRITTEN PERMISSION.

UNIT:MM

TOLERANCE	
DIMENSIONS	ANGLES
.X ±0.38	X ±5°
.XX ±0.30	.X ±3°
.XXX±0.15	.XX ±2°

TYPE: DC POWER JACK

MODEL NO: DC0005Y-_ _ _ _ _T_ _

DRAWING TYPE: CUSTOMER DRAWING

DRAWING No: BSCR-0000-0***

SCALE: N/A | VER.: 01 | PAGE: 1/1

DESIGNER BY:
CHECK BY:
APPROVED BY:

深圳市亿利百斯特电子有限公司
亿利百斯特 ShenZhen ElyBest Electronics Co., Ltd

深圳市亿利百斯特电子有限公司